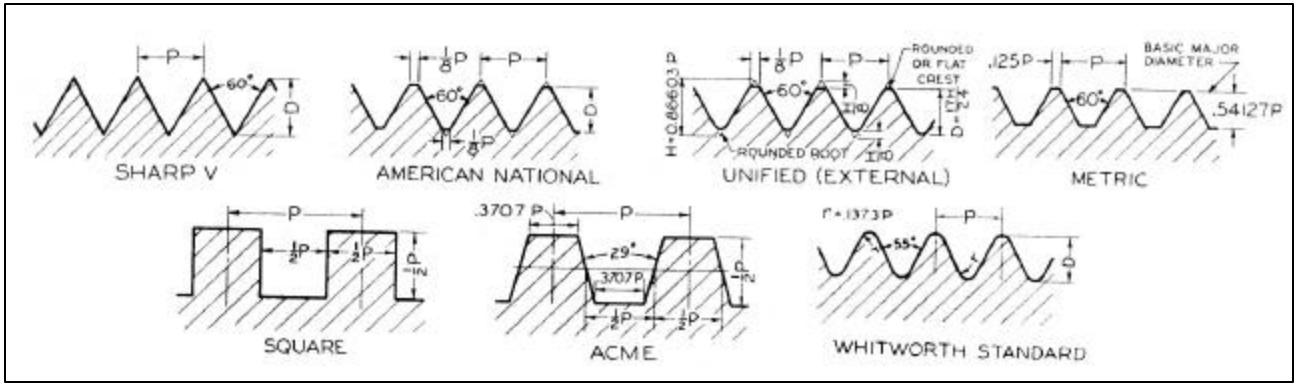
SHARP V
AMERICAN NATIONAL
UNIFIED (EXTERNAL)
ROUNDED OR FLAT CREST
ROUNDED ROOT
BASIC MAJOR DIAMETER
METRIC
SQUARE
ACME
WHITWORTH STANDARD

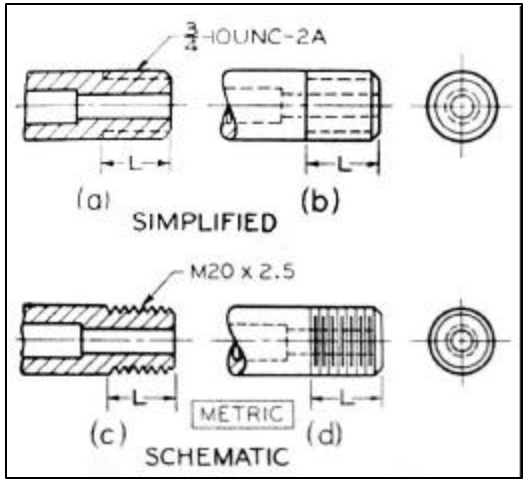
3/4-10UNC-2A
(a)
(b)
SIMPLIFIED
M20 x 2.5
METRIC
(c)
(d)
SCHEMATIC

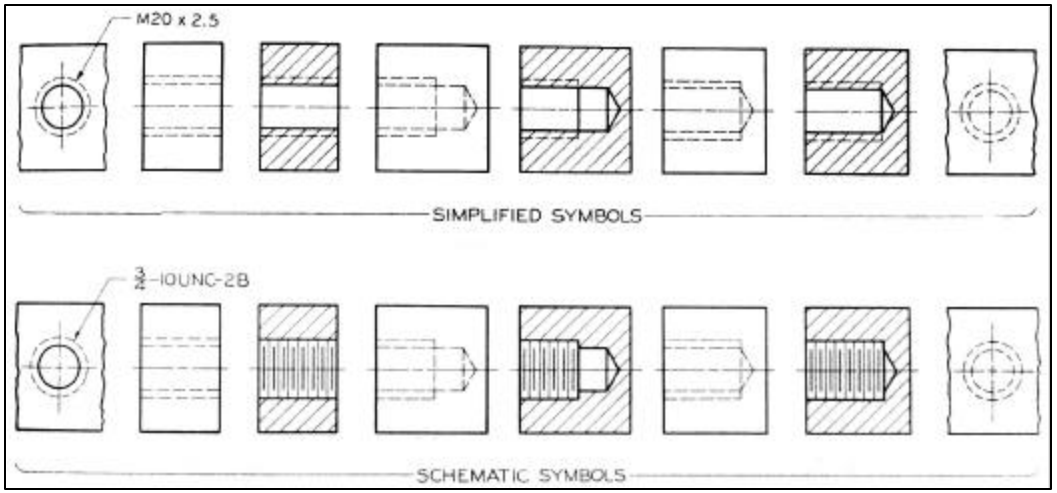
M20 x 2.5
SIMPLIFIED SYMBOLS
3/4-10UNC-2B
SCHEMATIC SYMBOLS

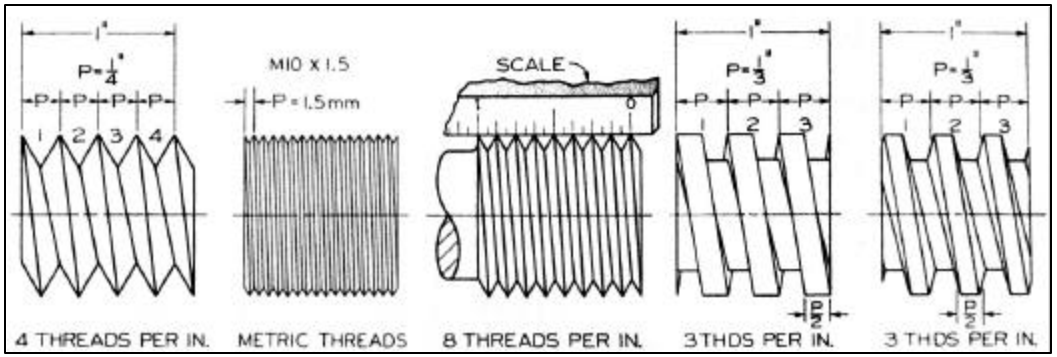
P=1/4"
M10 X 1.5
P = 1.5mm
SCALE
P=1/3"
P=1/3"
4 THREADS PER IN.
METRIC THREADS
8 THREADS PER IN.
3 THDS PER IN.
3 THDS PER IN.

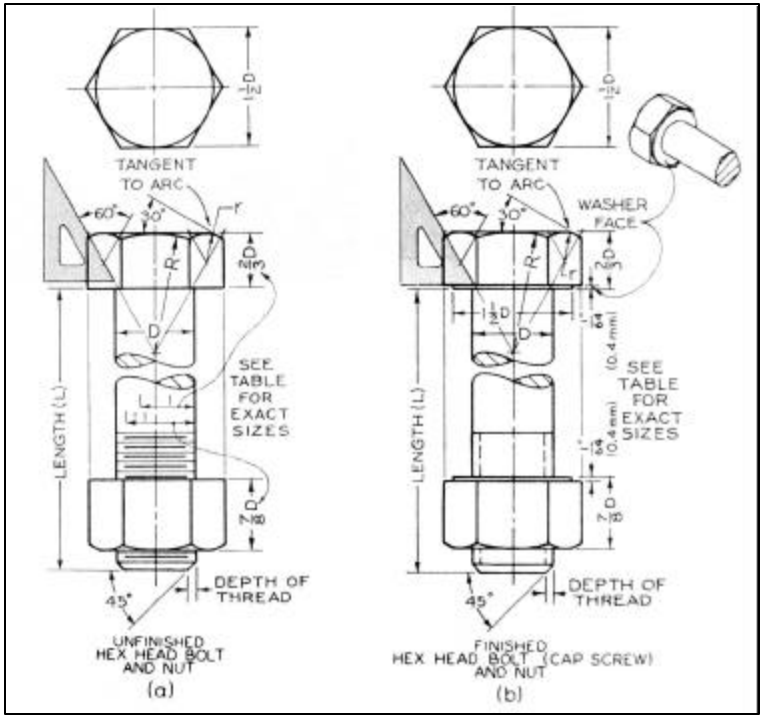
TANGENT TO ARC
SEE TABLE FOR EXACT SIZES
LENGTH (L)
DEPTH OF THREAD
UNFINISHED HEX HEAD BOLT AND NUT
(a)
WASHER FACE
FINISHED HEX HEAD BOLT (CAP SCREW) AND NUT
(b)